Bulk head details

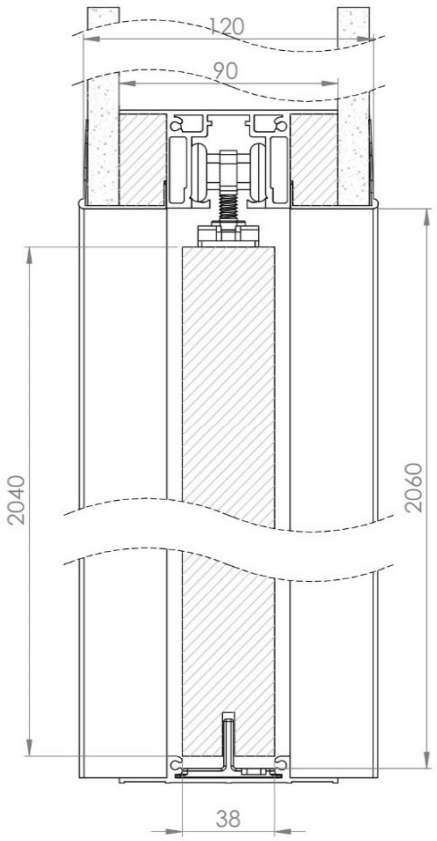

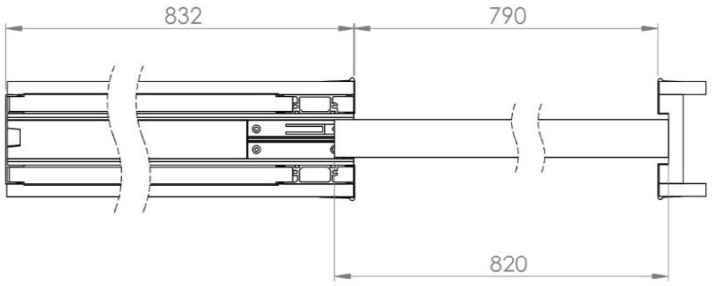

	NAME	DATE
DRAWN		
CHECKED		
ENG APPR.		
MFG APPR.		
Q.A.		
COMMENTS:		

Premium Sliding Doors

TITLE: Cavity Unit 2040x820

SIZE A | DWG. NO. | REV

SCALE: | SHEET 1 OF 1

Full height details

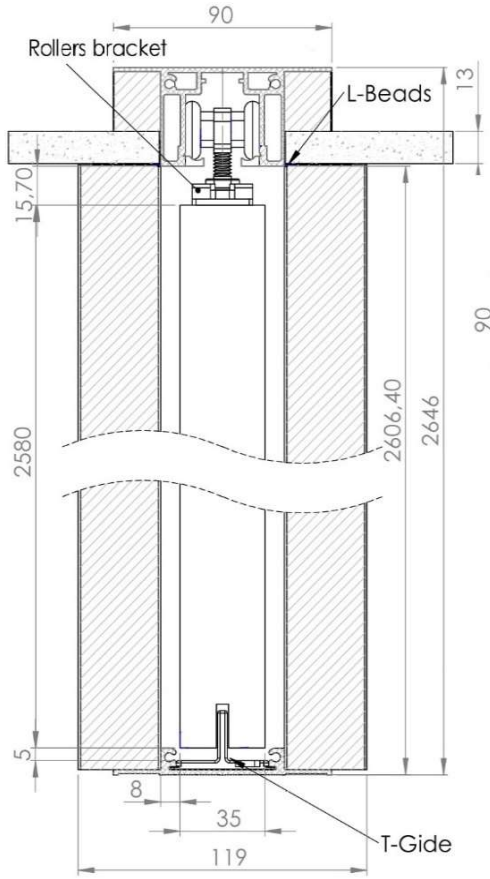

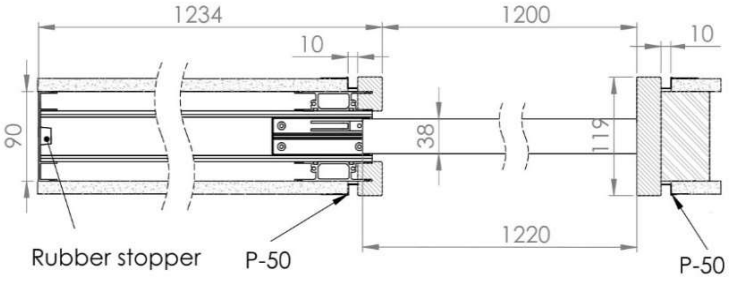

	NAME	DATE
DRAWN		
CHECKED		
ENG APPR.		
MFG APPR.		
Q.A.		
COMMENTS:		

Premium Sliding Doors

TITLE:

SIZE A | DWG. NO. Cavity Unit D04 2580x1220 | REV

SCALE: 1:2 | SHEET 1 OF 1

sales@premiumslidingdoors.com.au
2/15 Deadman road, Moorebank, NSW,2170